TITUS FURNITURE

100 Dolomite Dr., Toronto, On. M3J 2N2

WINGED HEADBOARD ASSEMBLY INSTRUCTIONS

BEFORE ASSEMBLY Check all parts listed are in box (if any parts are missing, or damaged, contact the store you purchased this item from immediately). Read ALL assembly instructions. Failure to assemble correctly may result in damage to the product.

	S	D	Q	K
1 	1	1	1	1
2 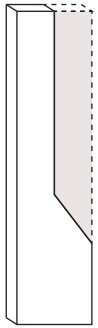	2	2	2	2
3 	6/6	6/6	6/6	6/6

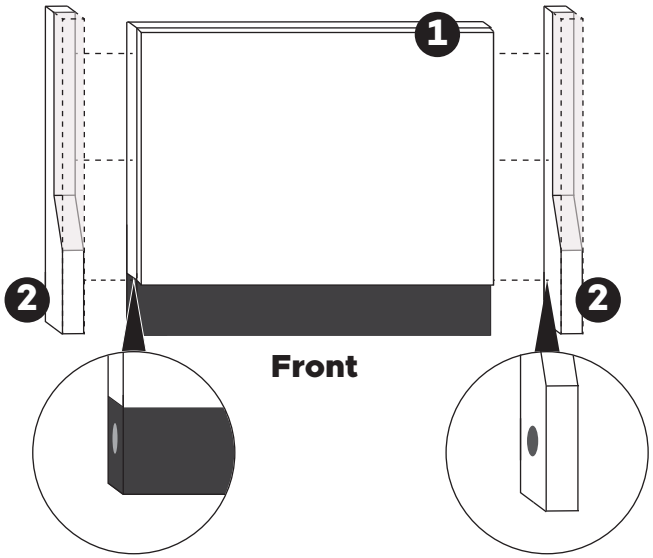

Front



Front

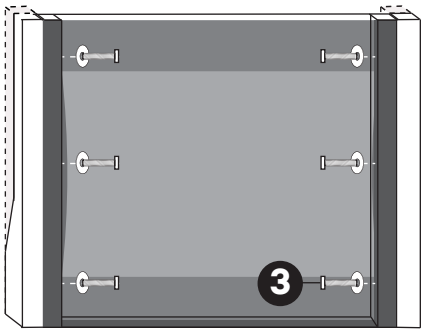

Back